Dept / Qty	
DC	1
ED	1
IE	1
ISO	1
PD	1
R&D	1
SD	1
QA	1
QC	1
QE	1

REV.	DESCRIPTION	DRAWN	CHECKED	APPROVED
A	NEW RELEASE	WPY 10/16/24'		

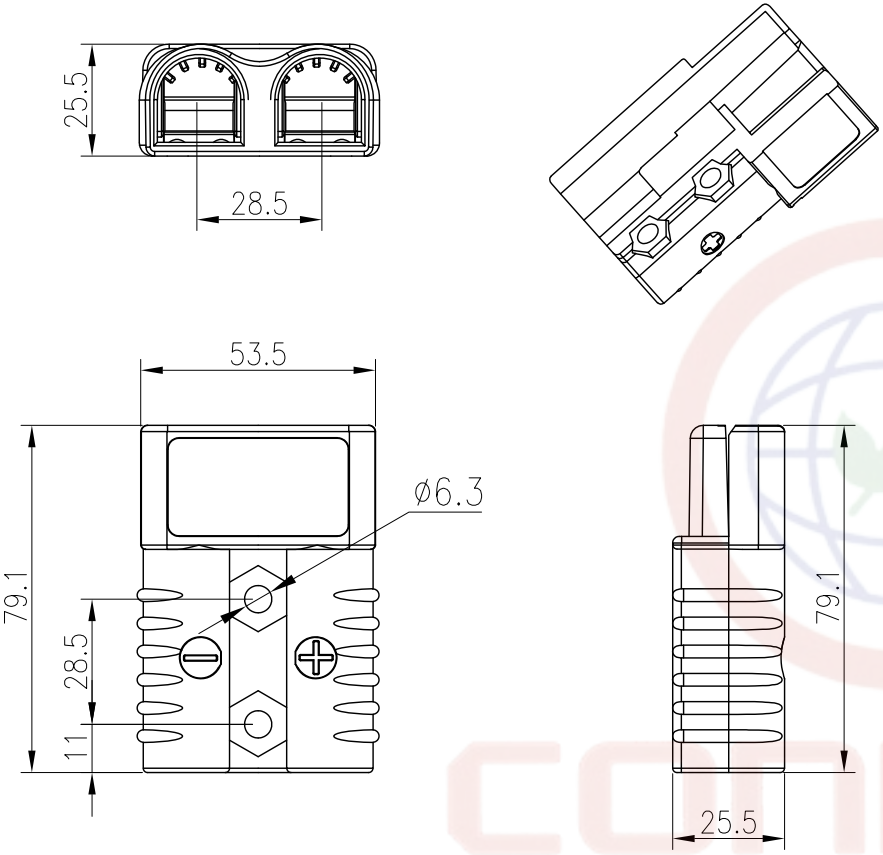

Notes:

1. Rated current: 175A
2. Voltage endurance: 600VDC
3. Recommended wire gauge: 6~1/0AWG

Materials:

1. Insulation Material: PC
2. Metal material: Copper plated with silver
3. Protection level: IP54
4. Flame retardant grade:UL94V-0

Product Number Code:

DS1224-04-X X X X

- Contact Plating
  Y: Full Silver
- Wire gauge:
  6:6AWG 4:4AWG
  2:2AWG 1:1/0AWG
- Housing color:
  G:Gray
- No. of Contacts
  2:2

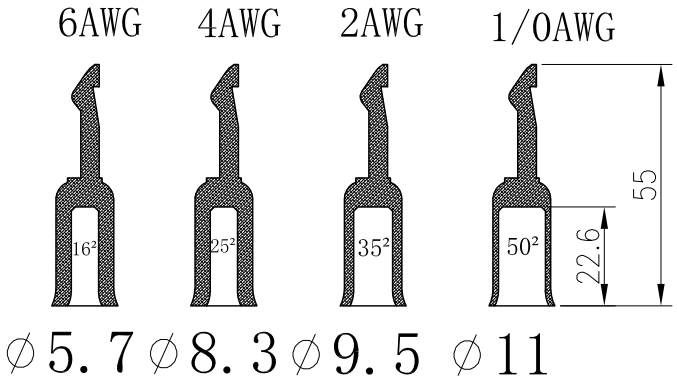

GENERAL TOLERANCE		ANGLE TOLERANCE	
X.	±0.60	X.	±5°
.X	±0.38	.X	±3°
.XX	±0.25	.XX	±2°

DRAWING TYPE	CUSTOMER		
SCALE	1:1	SHEET	1 OF 1
DRAWING NO.	C-DS1224-04-XXXX-A		

PROJECTION		TITLE	Anderson high current plug 175A
UNITS	mm		
SHEET SIZE	A4	SERIES	DS1224-04 SERIES

晨翔电子有限公司
CONNFLY CONNFLY ELECTRONIC CO. LTD

The information provided herein is from CONNFLY Electronic Co., Ltd. and is confidential. Any disclosure to a party other than the recipient is prohibited. The intellectual properties and its rights contained herein, including but not limited to, trademarks, patents, copyrights, trade secrets, and technical know-how, are owned exclusively by CONNFLY or its affiliates. Unauthorized use or modification is strictly prohibited without prior written consent from CONNFLY. All intellectual properties provided herein are for reference purposes only and does not constitute authorization of its use in any format or manner. CONNFLY may enforce its intellectual property rights at its own discretion; failures or delays to exercise such rights does not constitute a waiver of such rights.