Dept / Qty	
DC	1
ED	1
IE	1
ISO	1
PD	1
R&D	1
SD	1
QA	1
QC	1
QE	1

REV.	DESCRIPTION	DRAWN	CHECKED	APPROVED
A	NEW RELEASE	WPY 02/24/25'		

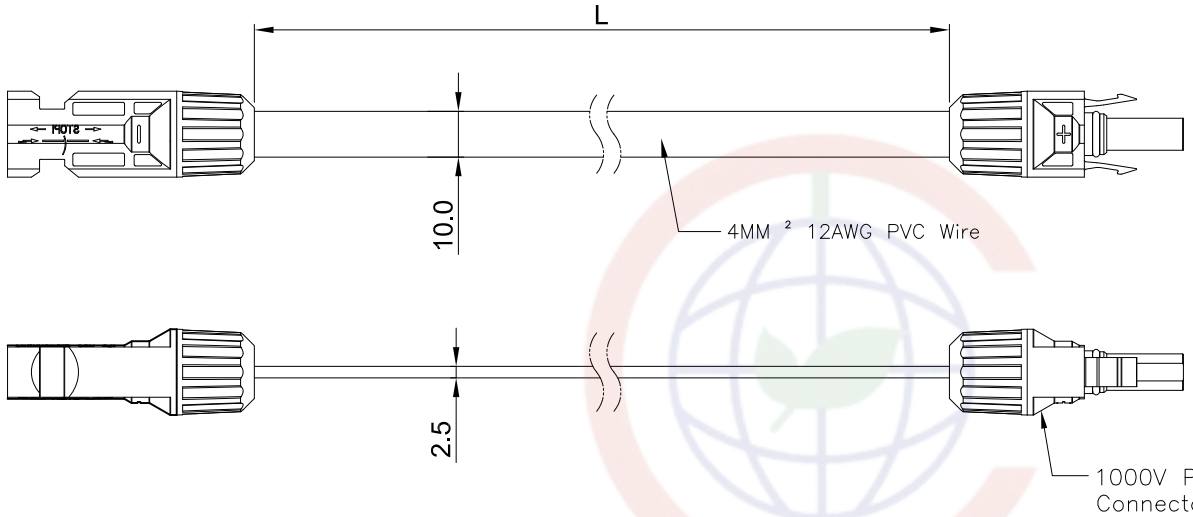

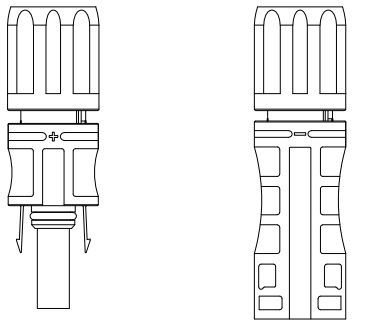

1500V Photovoltaic Connector

Note:

Specifications:

1. Rated voltage:1000/1500V
2. Rated current:30A

Materials:

1. Insulation material:Thermoplastic plastics
2. Conductor material:Tin plated copper
3. Temperature range:-20℃~+90℃

Product Number Code:

DS1196-06-X X X X X X X

- Wire length(Dim L): 050:50mm 100:100mm.....
- Cable size: A:4mm² B:6mm²
- Voltage type: H:1500V L:1000V(For 4mm² Only)
- Cable color: B:Black R:Red
- Contact plating: 6:Tin plated
- Housing color: B:Black
- 1T1:Male+Female

(Series Image-Reference Only)

GENERAL TOLERANCE		ANGLE TOLERANCE	
X.	±0.60	X.	±5°
.X	±0.38	.X	±3°
.XX	±0.25	.XX	±2°

DRAWING TYPE	CUSTOMER		
SCALE	1:1	SHEET	1 OF 1
DRAWING NO.	C-DS1196-06-XXXXXX-A		

PROJECTION		TITLE	Photovoltaic extension flat cable
UNITS	mm		
SHEET SIZE	A4	SERIES	DS1196-06 Series

晨翔电子有限公司

CONNFLY CONNFLY ELECTRONIC CO. LTD

The information provided herein is from CONNFLY Electronic Co., Ltd. and is confidential. Any disclosure to a party other than the recipient is prohibited. The intellectual properties and its rights contained herein, including but not limited to, trademarks, patents, copyrights, trade secrets, and technical know-how, are owned exclusively by CONNFLY or its affiliates. Unauthorized use or modification is strictly prohibited without prior written consent from CONNFLY. All intellectual properties provided herein are for reference purposes only and does not constitute authorization of its use in any format or manner. CONNFLY may enforce its intellectual property rights at its own discretion; failures or delays to exercise such rights does not constitute a waiver of such rights.