Dept / Qty	
DC	1
ED	1
IE	1
ISO	1
PD	1
R&D	1
SD	1
QA	1
QC	1
QE	1

REV.	DESCRIPTION	DRAWN	CHECKED	APPROVED
A	NEW RELEASE	JLZ 05/30/23'		

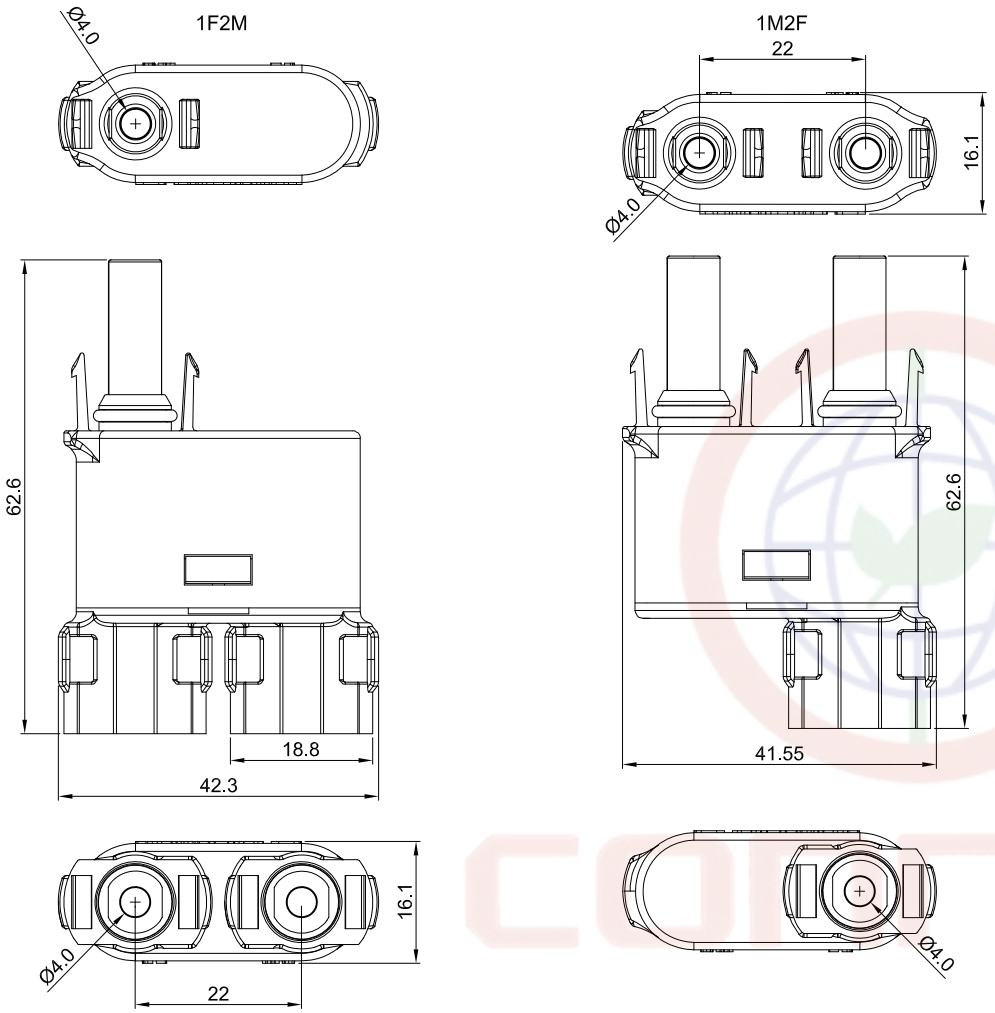

Notes:

Specifications:

1. Contact Resistance: 0.5mΩ Max.
2. Insulation Resistance: 1000MΩ Min.
3. Test voltage: 8kV(50Hz,1min).
4. Current Rating:40A.
5. Voltage Rating:1500V DC.
6. Degree of protection: IP2X/IP68
7. Safety class: II
8. Overvoltage category: CATIII
9. Insertion force: 50N Max.
10. Withdrawal force: 50N Min.
11. Temperature: -40°C~+85°C.

Materials:

1. Insulating material: PPE,Black.
2. Waterproof Plug: Silicone rubber,Salmon.
3. Contact material: Copper alloy,Tin plated.

Product Number Code:

DS1186-06 - X X X X X

- Packing Type
  P: Polybag
- Contact plating
  6: Tin
- Housing color
  B: Black
- Connector type
  A: Adaptor
- No. of contacts
  1F2M: 1Female+2Male
  1M2F: 1Male+2Female
  1T2: 1F2M+1M2F

(Series Image-Reference Only)

GENERAL TOLERANCE		ANGLE TOLERANCE	
X.	±0.60	X.	±5°
.X	±0.38	.X	±3°
.XX	±0.25	.XX	±2°

DRAWING TYPE	CUSTOMER		
SCALE	1:1	SHEET	1 OF 1
DRAWING NO.	C-DS1186-06-XXXXX-A		

PROJECTION		TITLE	Solar Adapter 1 To 2 Type
UNITS	mm		
SHEET SIZE	A4	SERIES	DS1186-06 SERIES

晨翔电子有限公司

CONNFLY ELECTRONIC CO. LTD

The information provided herein is from CONNFLY Electronic Co., Ltd. and is confidential. Any disclosure to a party other than the recipient is prohibited. The intellectual properties and its rights contained herein, including but not limited to, trademarks, patents, copyrights, trade secrets, and technical know-how, are owned exclusively by CONNFLY or its affiliates. Unauthorized use or modification is strictly prohibited without prior written consent from CONNFLY. All intellectual properties provided herein are for reference purposes only and does not constitute authorization of its use in any format or manner. CONNFLY may enforce its intellectual property rights at its own discretion; failures or delays to exercise such rights does not constitute a waiver of such rights.