REV.	DESCRIPTION	DRAWN	CHECKED	APPROVED
A	NEW RELEASE	JLZ 11/22/16'		
B	DRAWING UPDATE	JLZ 12/22/21'		

Schematics:

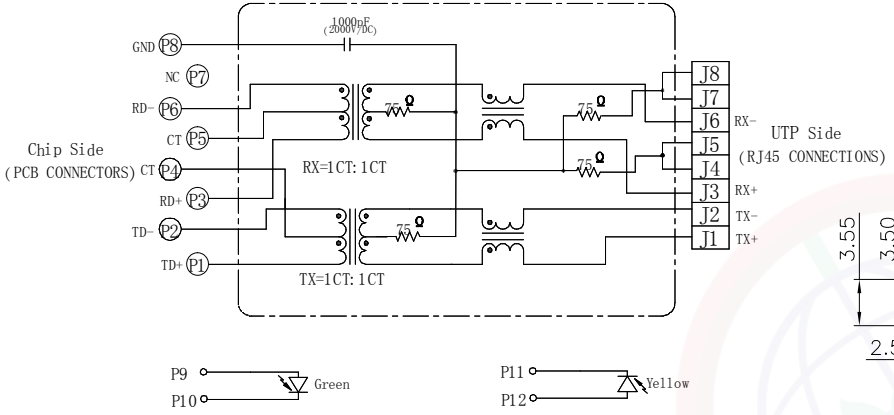

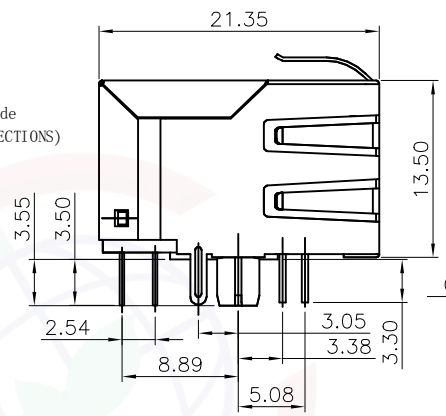

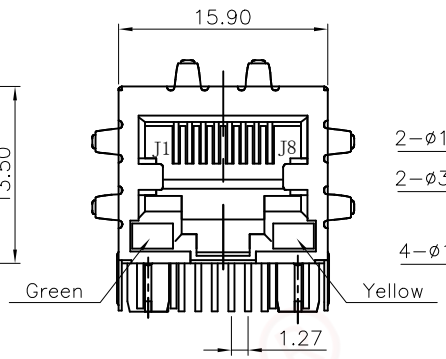

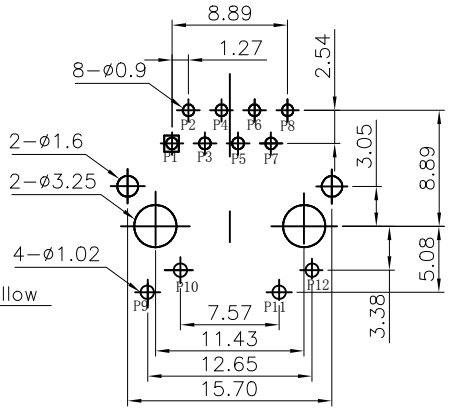

RECOMMEND PCB LAYOUT

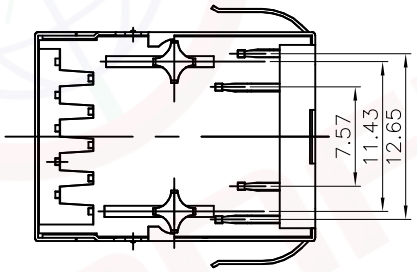

SPECIFICATION

1. Insulation Resistance:1000MΩ Min.
2. Withstand Voltage:500V,AC/Minute.
3. Durability:600 Cycles Min.
4. Product Number Code:

DS1134-14-X X X X

- Housing Color B:Black
- Contact Plating J: Selective 6u" gold
- No.Of Contacts 8:8p8c
- Connector Type S:Socket

Electrical Specifications @25℃/65%RH

1. Isolation Voltage: 1500V/AC(Chip Side to UTP Side)
2. OCL:350uH Minimum @100KHz 100mV with 8mA DC
3. Instertion Loss: -1.1dB Maximum @100KHz-100MHz
4. Return Loss: -18dB Minimum @1MHz-30MHz
   -14dB Minimum @30MHz-60MHz
   -12dB Minimum @60MHz-80MHz
5. Common Mode Rejection: -40dB Minimum @1MHz-30MHz
   -35dB Minimum @30MHz-60MHz
   -30dB Minimum @60MHz-100MHz
6. Cross Talk: -40dB Minimum @1MHz-30MHz
   -35dB Minimum @30MHz-60MHz
   -30dB Minimum @60MHz-80MHz

GENERAL TOLERANCE		ANGLE TOLERANCE	
X.	±0.60	X.	±5°
.X	±0.38	.X	±3°
.XX	±0.25	.XX	±2°

DRAWING TYPE	CUSTOMER		
SCALE	1:1	SHEET	1 OF 1
DRAWING NO.	C-DS1134-14-XXXX-B		

PROJECTION		TITLE	PCB JACK 8P 1PORT W/ LED W/ Shell AFTER 3.05mm Type
UNITS	mm		
SHEET SIZE	A4	SERIES	DS1134-14 SERIES

晨翔电子有限公司
CONNFLY ELECTRONIC CO. LTD