Dept / Qty	
DC	1
ED	1
IE	1
ISO	1
PD	1
R&D	1
SD	1
QA	1
QC	1
QE	1

REV.	DESCRIPTION	DRAWN	CHECKED	APPROVED
A	NEW RELEASE	HP 23/06/05'		LJC 23/06/05'
B	DRAWING UPDATE	JLZ 09/06/18'		

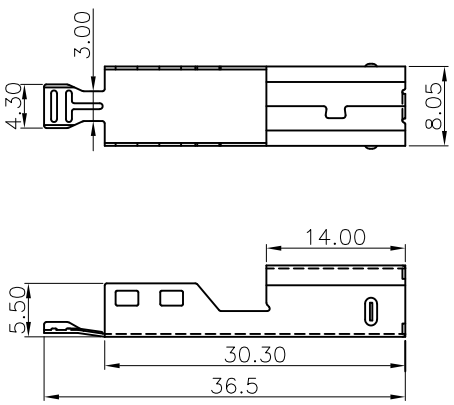

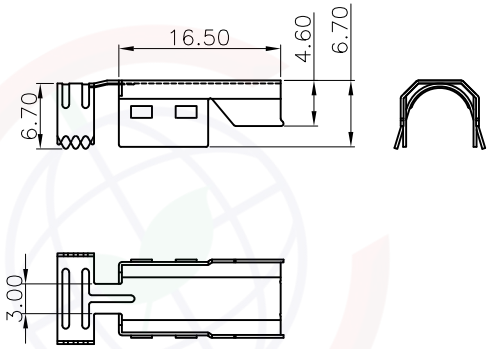

NOTES:

1. SPECIFICATIONS
   - . Contact Resistance: 30mΩ max
   - . Insulator Resistance: 1000MΩ min.
   - . Current Rating: 30V DC 1.5 A max
   - . Dielectric withstanding voltage: AC500V For 1 minute
   - . Contact: Copper alloy
   - . Housing: PBT.

2. PRODUCT NUMBER CODE:

DS1108 – X X X

- Contact Plating
  - 0: Selective gold flash
  - C 3u" gold
  - 3: 30u" gold
- Shell Plating
  - 6: Tin
  - N: Nickel
  - 8: Full gold
- Color of Housing
  - W: White
  - B: Black

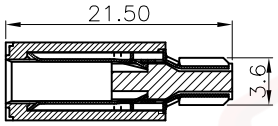

SECTION:A–A

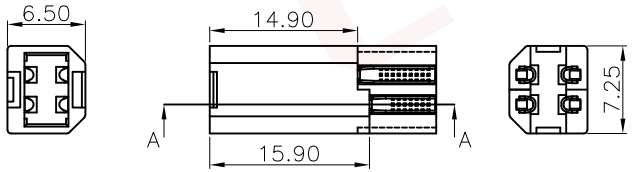

GENERAL TOLERANCE	ANGLE TOLERANCE
X. ±0.60	X. ±5°
.X ±0.38	.X ±3°
.XX ±0.25	.XX ±2°

DRAWING TYPE	CUSTOMER		
SCALE	1:1	SHEET	1 OF 1
DRAWING NO.	C–DS1108–XXX–B		

PROJECTION		TITLE	USB–B Male Solder
UNITS	mm		
SHEET SIZE	A4	SERIES	DS1108 SERIES

晨翔电子有限公司

CONNFLY CONNFLY ELECTRONIC CO. LTD

The information provided herein is from CONNFLY Electronic Co., Ltd. and is confidential. Any disclosure to a party other than the recipient is prohibited. The intellectual properties and its rights contained herein, including but not limited to, trademarks, patents, copyrights, trade secrets, and technical know–how, are owned exclusively by CONNFLY or its affiliates. Unauthorized use or modification is strictly prohibited without prior written consent from CONNFLY. All intellectual properties provided herein are for reference purposes only and does not constitute authorization of its use in any format or manner. CONNFLY may enforce its intellectual property rights at its own discretion; failures or delays to exercise such rights does not constitute a waiver of such rights.